Yorkshire Packaging Systems Limited
Telephone 01924 441355
www.yps.co.uk
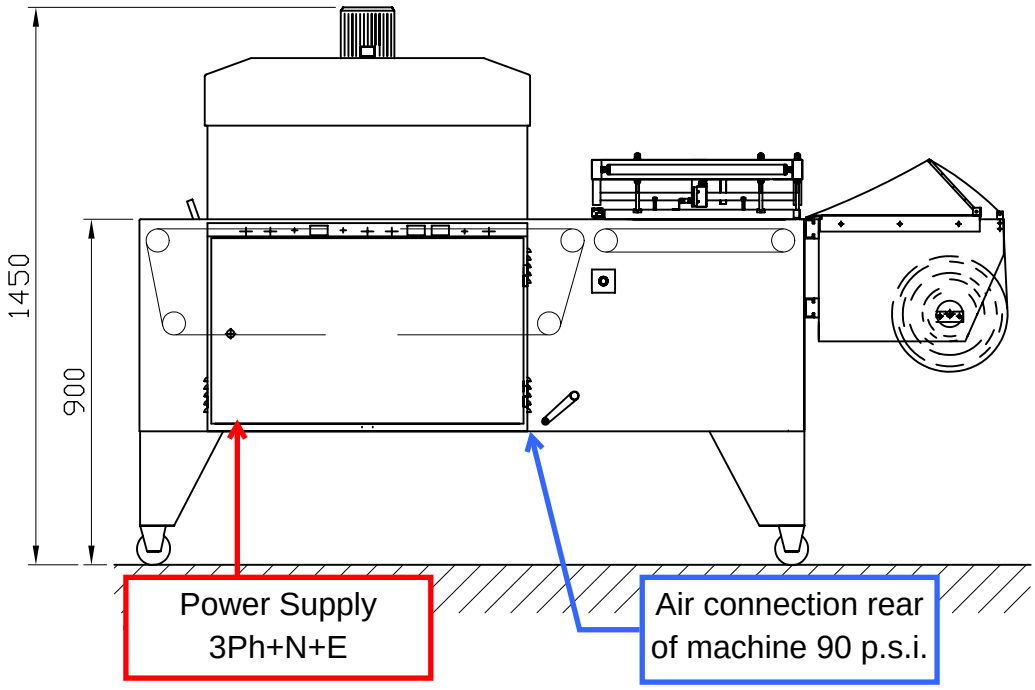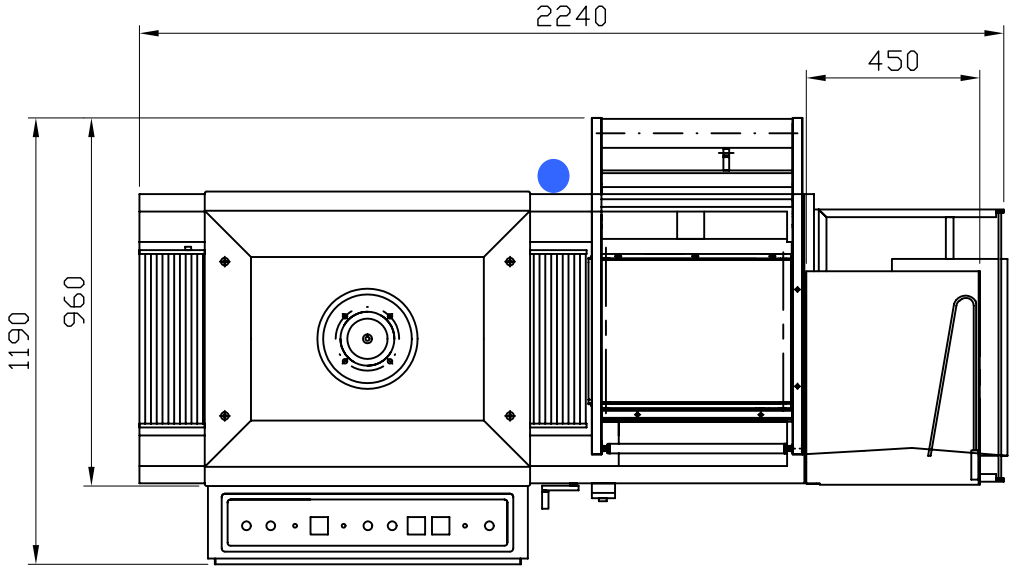
YORKSHIRE PACKAGING SYSTEMS LTD